SMART MARITIME

TO SHIP POWER TRANSFER FOR SUSTAINABLE PROPULSION

ONLINE WEBINAR, 2021-10-07

sfi Centre for Research-based Innovation
The Research Council of Norway

Presenters

Mehdi Zadeh (moderator)
Associate Professor at NTNU

Siamak Karimi
PhD Candidate at SFI Smart Maritime
Department of Marine Technology
NTNU

Jon Are Suul
Research Scientist at SINTEF Energi AS
Adjunct Associate Professor at NTNU
Department of engineering cybernetics

Outline

- Principle of shore-to-ship power transfer and charging
- Offshore-to-ship charging
- Design framework
- Universal shore-to-ship charging
- High power wireless charging
- Way forward

Introduction

- To-ship power transfer:
  - Shore-to-ship power or cold ironing
  - Shore-to-ship charging
  - Offshore-to-ship charging

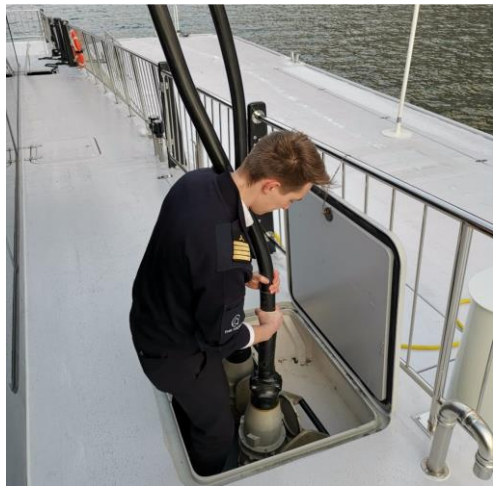

manual connection of two cables for charging the future of the fjords. Photo: Severin Synnevåg

FerryCHARGER. Photo: Stemmann-Technik

Charging tower for MF Elektra. Photo: Cavotec

Shore-to-ship Power

- Keeping emissions, noise and vibrations away from ports by plugging the ship to the shore power instead of running engines since 2001.
- Around 160 shore power infrastructures around the world (by Oct. 2021)
- Standardized.
  - IEC 80005-1, IEC 80005-2, and IEC 80005-3
  - IEC 62613-1/2 and IEC 60309-5

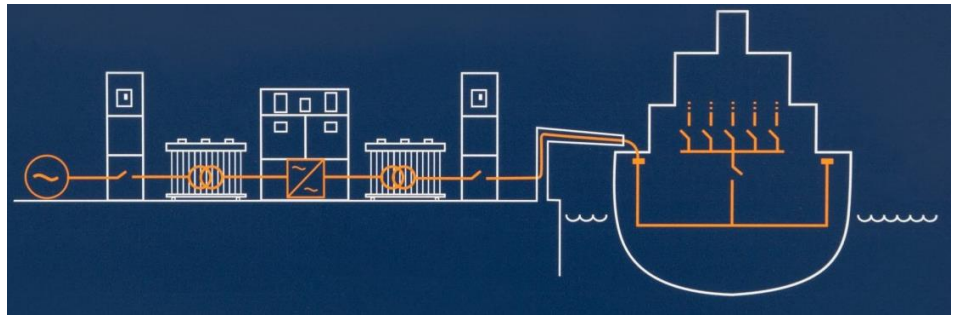

Shore connection for berthed ships. Source: : SIHARBOR

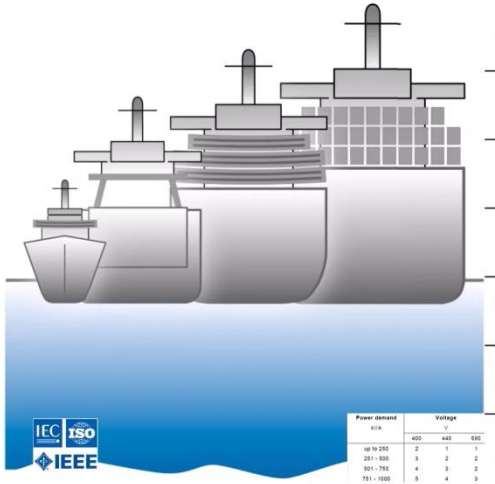

Container Ship (2)	up to 7,5 MVA
Cruise Ship (4)	up to 20 MVA
Reefer (2)	up to 10 MVA
Ro-Ro, Ferry (1)	up to 6,5 MVA
Tanker (3)	up to 3,6 MVA
LNG Carrier (3)	up to 10,7 MVA
Diverse (1-5) 400V-690V	up to 1000 kVA

Shore connection Standards, IEC 80005-1/3. souce: Stemman-Technik

The shore power infrastructure in europe (green: in operation, blue: decided, and gray: under discussion). source: AFI at DNV

Shore-to-ship Charging (1/3)

- Shore-to-ship charging (S2SC) system is vital for realization of:
  - Zero-emission and battery-powered ships
  - plug-in hybrid ships
- Applications
  - Passenger and car ferries
  - River and channel vessels
  - Regional freight transportation
  - Cruise vessels
- Principals
  - Land-based generation into charging.
  - Onshore battery if needed for grid support and/or energy arbitrage.
  - The charging interconnection by automated plug systems.
  - Onboard charging interface.

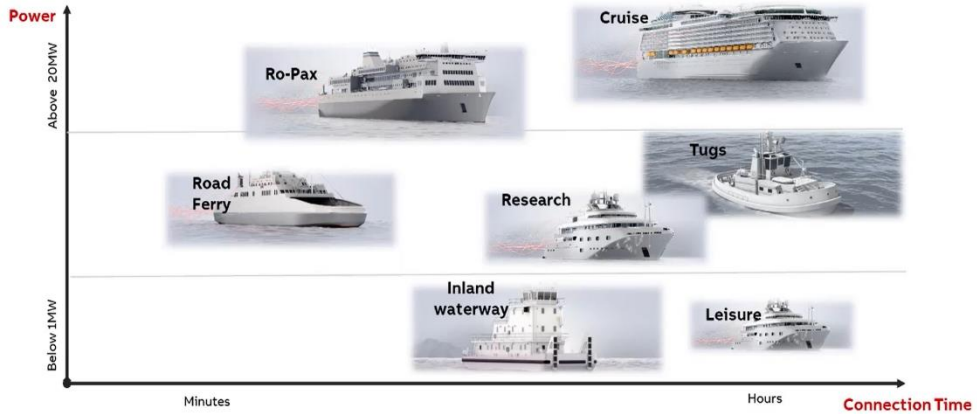

Requirements of different applications of S2SC systems. Source: ABB marine and ports.

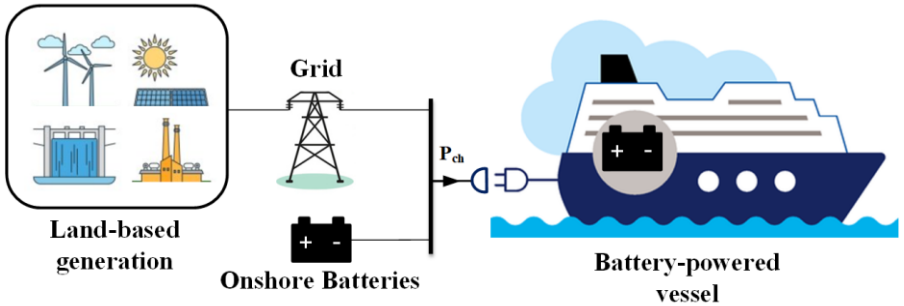

The S2SC is the bridge between the land-based generation and the onboard power system.

Shore-to-ship Charging (2/3)

- Power system architecture of shore-to-ship charging systems*:

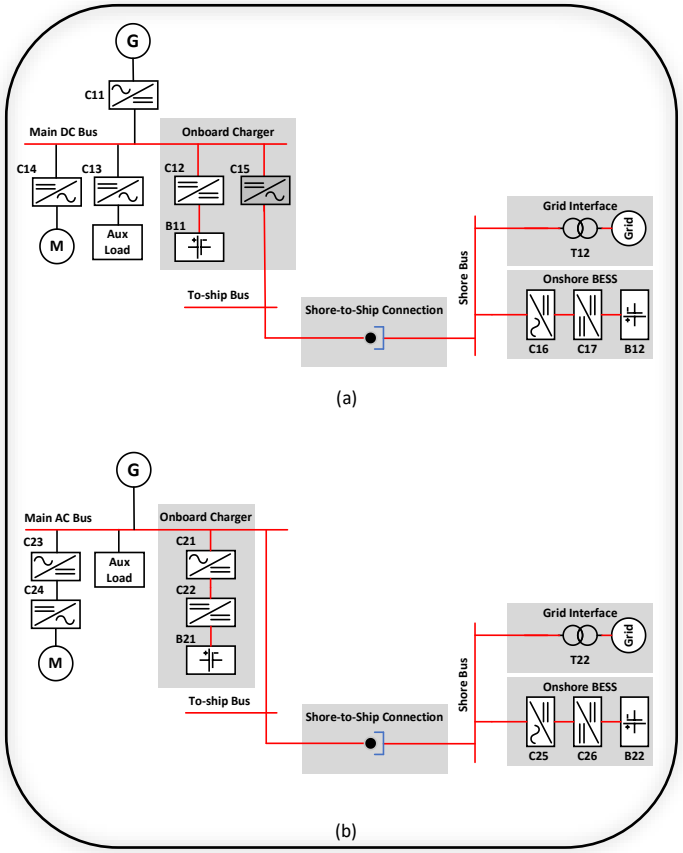

ac charging for (a) a dc-based propulsion system and (b) an ac-based propulsion system.

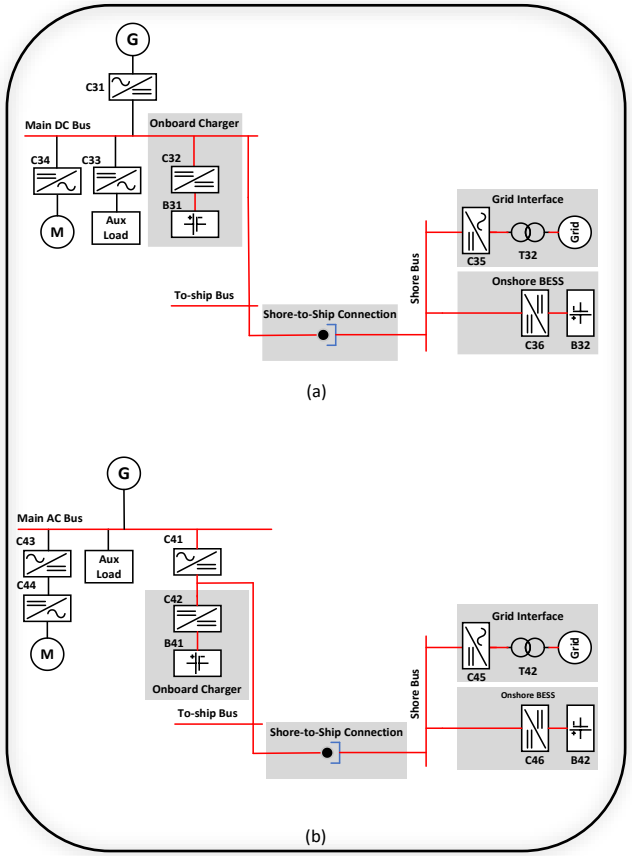

dc charging for (a) a dc-based propulsion system and (b) an ac-based propulsion system.

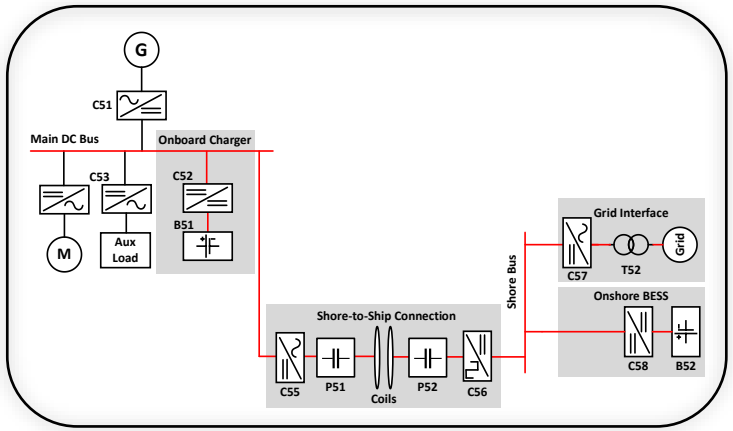

A single line diagram of an inductive S2SC system.

*S. Karimi, M. Zadeh and J. A. Suul, "Shore Charging for Plug-In Battery-Powered Ships: Power System Architecture, infrastructure, and Control," in IEEE Electrification Magazine.

Shore-to-ship Charging (3/3)

- Opportunities
  - 350 MWh batteries are in service (source: Foreship).
  - 30% lower maintenance (source: Corvus).
  - Up to 85% energy source to thrust efficiency compared to 50% diesel mechanical systems.
  - For an all-electric ferry with 1600kWh per round trip: 135 Euro (source:E-ferry ellen).
- Challenges
  - Preplanned tough operation schedules → critical charging time → high-power charging
  - High-power pulse loads → high stress on the grid
  - High power and energy requirement → need for strong grid
  - Power-electronics-dominated system → reliability, stability, efficiency and cost issues
  - Lack of a worldwide standard → diversity of the configurations → non-optimal design
  - The capital expenditure to utilization ratio is high

Offshore-to-ship Charging (1/4)

- Offshore Charging for
  - Crew Transfer Vessels (CTV)
  - Service Operating Vessels (SOV)
- Opportunities
  - Net-zero emission operation, from wind to propellers.
  - Low operation cost due to the abundance of the energy source, wind.
- Challenges
  - Safety aspects regarding the cables and plugs in water.
  - Loss of position due to harsh sea conditions.
  - High capital investments.

Source: CharlieChesvick/iStock

Offshore-to-ship Charging (2/4)

- Offshore Charging from Wind Turbine*:
  a) Direct connection to the WTG transformer.
  b) Connection to the WTG transformer via a dedicated transformer or converter.
  c) Connection to the dc link of the back-to-back converter of WTG.

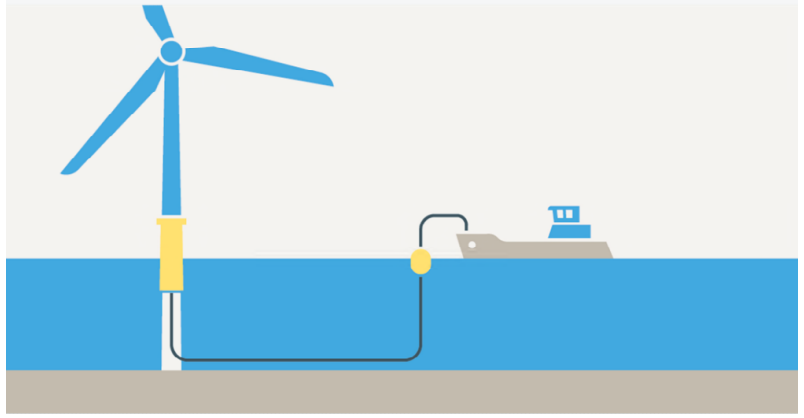

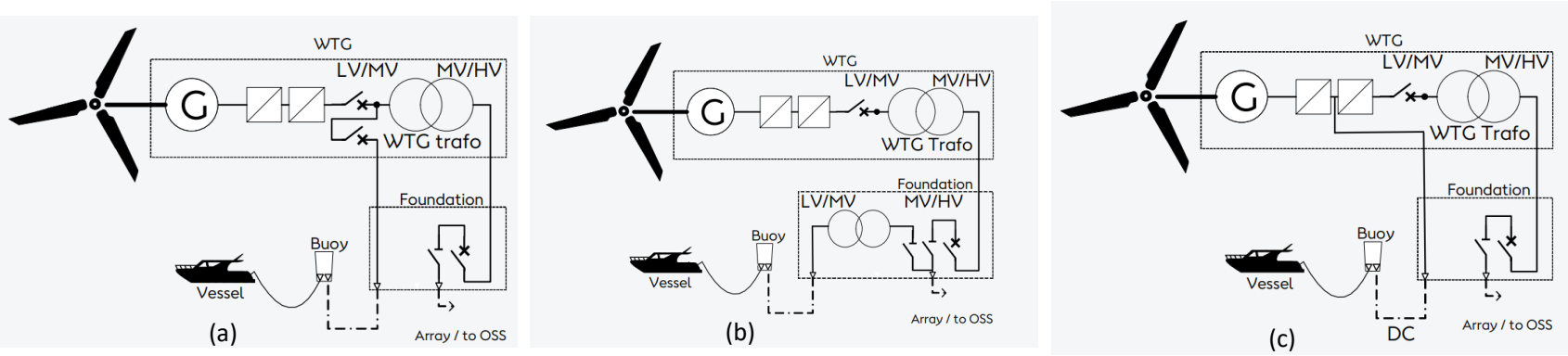

Integration of offshore charging into wind turbines*

*V. T. Sæmundsson, and O. D. Henriksen, "Offshore charging," Ørsted, October 2nd, 2020.

Offshore-to-ship Charging (3/4)

- Offshore Charging from Offshore Substation (OSS)*
  a) Connection to high voltage side of the OSS transformer (110V ~11kV).
  b) Connection to the low voltage side of OSS transformer (11kV ~132kV).

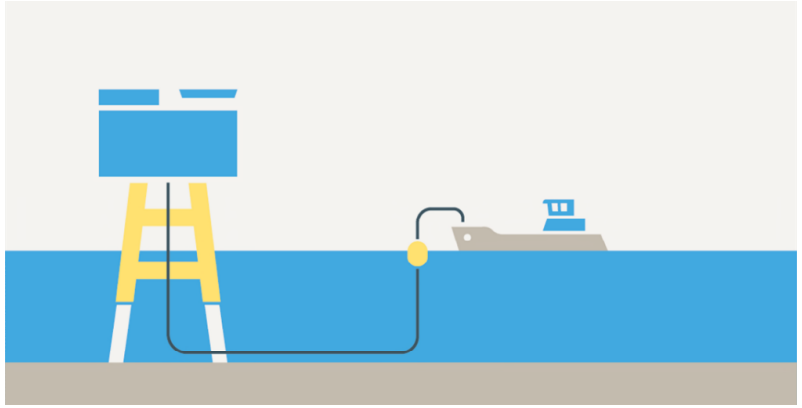

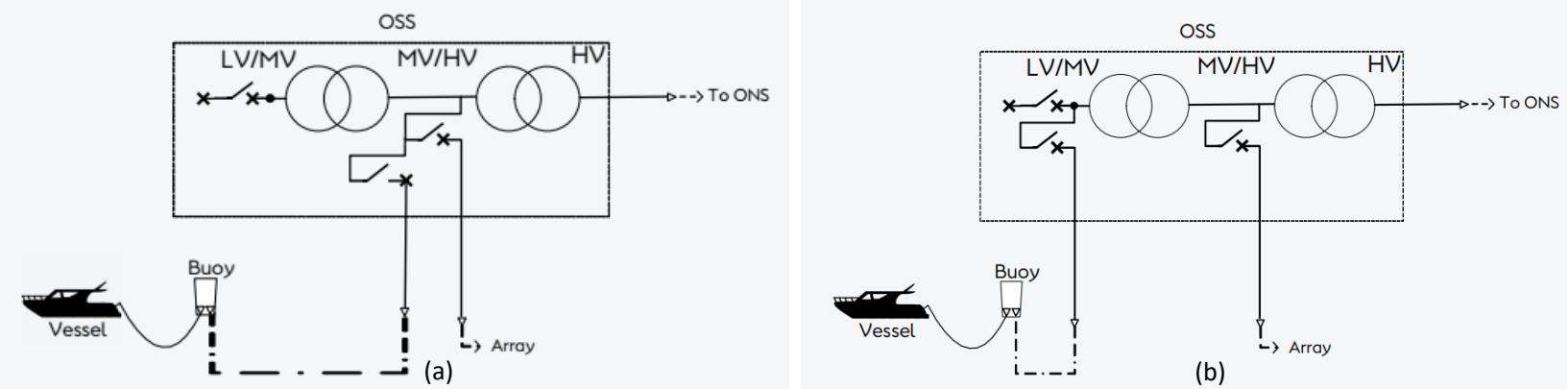

Integration of offshore charging into Offshore Substation*

*V. T. Sæmundsson, and O. D. Henriksen, "Offshore charging," Ørsted, October 2nd, 2020.

Offshore-to-ship Charging (4/4)

- Other options to be evaluated:
  - Offshore batteries vs emergency diesel generators.
  - Offshore PV.
  - Integration to the HVDC rectifier station.
- Need for a comprehensive study on the benchmarking of the solutions.

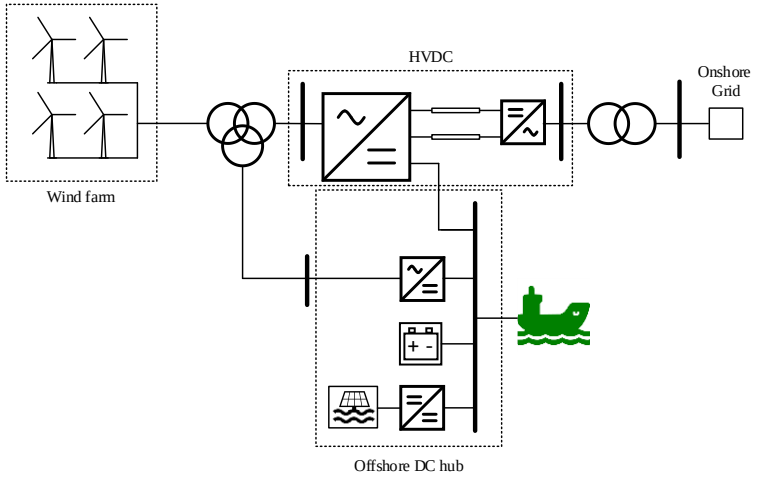

Integration of offshore charging into HVDC rectifier with offshore batteries and offshore PV.

Design Framework

- Objectives
  - To benchmark all the feasible design solutions.
  - Mapping of the operation scenarios.
- Applications
  - All types of to-ship power transfer systems.
- Requirements
  - Manufacturers' datasheets.
  - System requirements form ship operators.
- Challenges
  - Modeling: trade-off between the simplicity and fidelity.
  - Computational effort: the complex system.
  - Uncertainty in design.
- More performance indicators
  - Power quality of the onshore grid.
  - Quay space for the onshore facilities.
  - Weight of onboard interface.

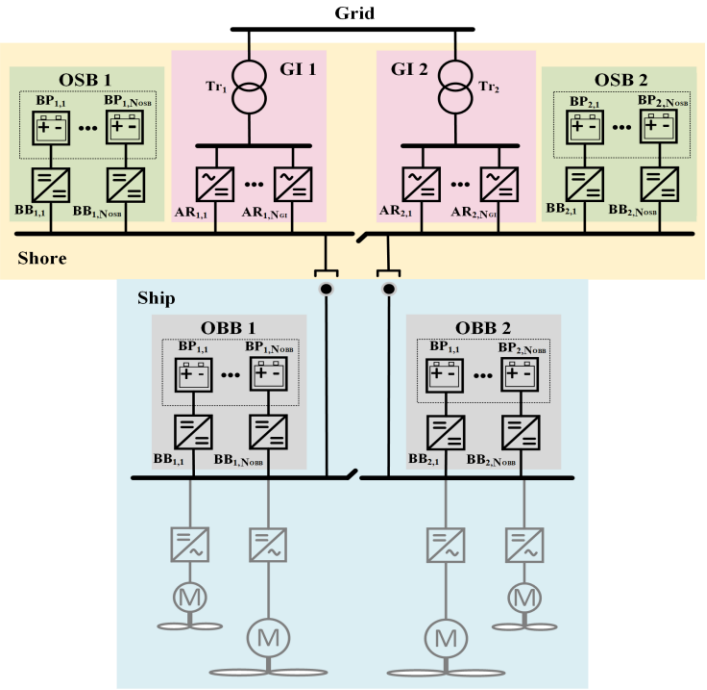

The single line diagram of an all-electric ship with dc shore-to-ship charging.

Design Framework

- Energy efficiency modeling

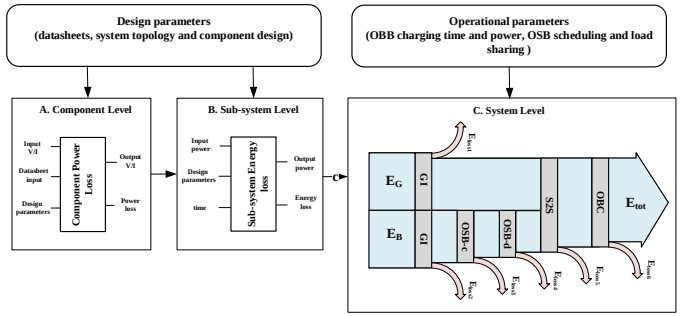

The proposed S2S charging energy efficiency calculation model.

- Results

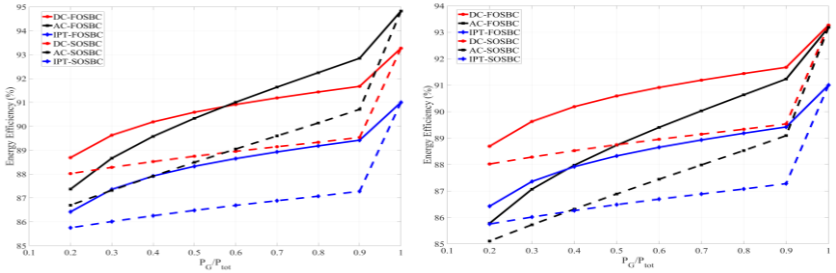

Overall energy efficiency curves for different charging solutions (IPT stands for Inductive Power Transfer) used for a (a) dc-based and a (b) ac-based propulsion system.

- Efficiency of ac charging > dc charging > inductive charging (no onshore battery)
- Charge onshore batteries with the highest available grid power → higher energy efficiency.
- Inductive charging can be even more efficient than ac charging.

- Reliability modeling

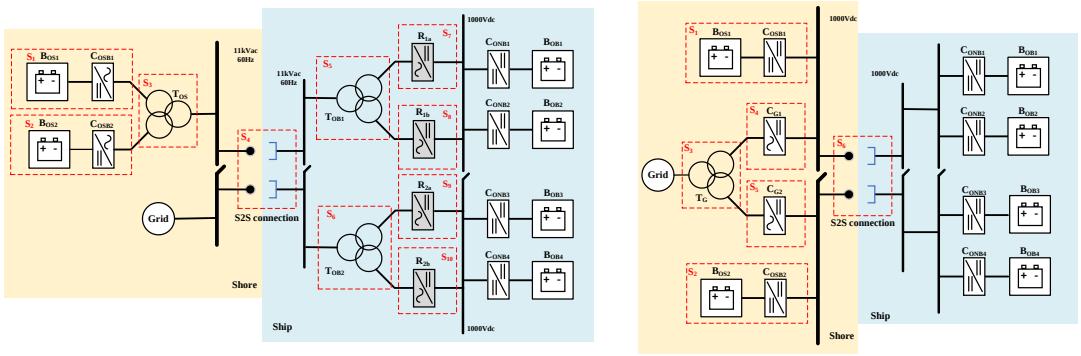

(a) (b)

(a)The ac S2SC system and (b) the dc S2SC system

- Results
  - The reliability comparison between ac and dc charging systems:

The calculated reliability indices for ac and dc charging systems
LCE: Loss of Charging Expected, DCE: Derated Charging Expected, MTTFF: Meantime to the First Failure

Reliability index	AC S2SC system	DC S2SC system
LOCE (charging break/yr)	2.98	2.02
DCE (charging break /yr)	64.63	62.95
MTTFF (yr)	9.77	13.49

- Higher share of onshore battery → lower reliability
- Lower number of parallel units → higher reliability

Universal Charging

- Motivation
  - Improve the utilization of the infrastructures.
  - Various onboard power system configurations (retrofit and newly built.)
  - Ever-increasing the need for infrastructures for zero-emission vessels.
  - Modern electrified ports.

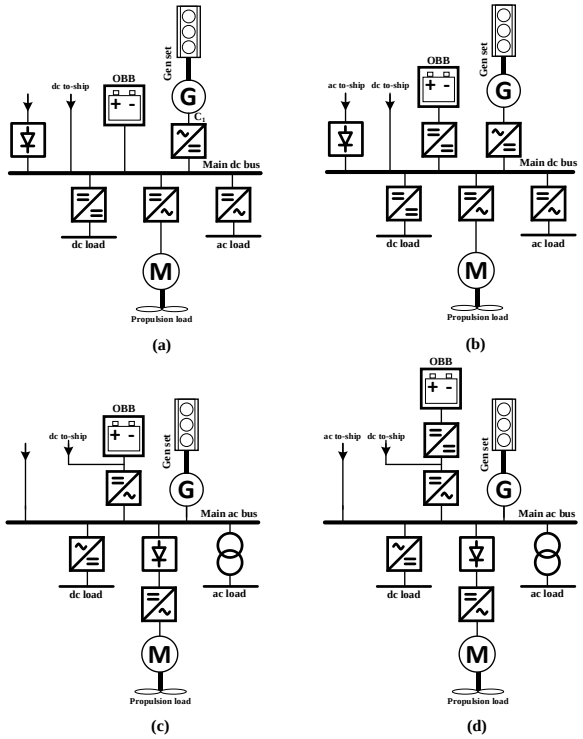

The common power system architecture of plug-in hybrid marine vessels with (a) floating dc bus, (b) voltage-controlled dc bus, (c) floating ac bus and (c) voltage-controlled ac bus.

- Objectives
  - Compatible to the most common onboard charging interfaces.
  - Compatible to concurrent charging requests.
  - Minimization of the power conversion stages.

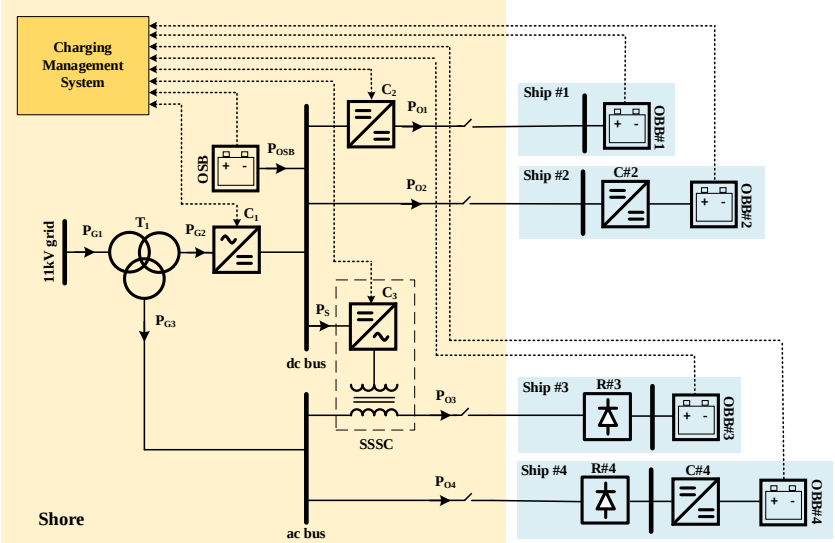

The proposed multi-vessel universal S2SC system (dotted lines representing the control and measurement signals, and the solid lines are showing the power line).

Research summary

- Shore-to-ship charging systems have been successfully enabling the utilization of batteries onboard towards the zero-emission shipping.
- The challenges around the shore-to-ship charging systems were introduced: cost, efficiency, reliability and interoperability.
- The technical solutions of the offshore-to-ship charging were briefly introduced.
- A design framework for to-ship power systems based on the defined performance indicators was proposed.
- A universal shore-to-ship charging system for modern ports was proposed.

Senter for forskningsdrevet innovasjon
Norges forskningsråd

Introduction to high power wireless charging

- Research for improving power density

Jon Are Suul
SINTEF Energi AS & NTNU Department of Engineering Cybernetics

SMART MARITIME

Inductive charging for ships

- Dedicated technology for high power charging demonstrated by Wärtsilä
  - 1.2 MW power transfer with up to 50 cm transmission distance
  - More than one year of regular operation with MF Folgefonn from 2017
- Solution from IPT Technology adapted to marine applications
  - Solution developed from existing technology for charging of busses
  - Regular operation of 100 kW system in Fredrikstad since 2019

Inductive charging by IPT Technology

Inductive charging by Wärtsilä

Development for ship applications in Norway

Wireless high-power battery charging for ships

- Concept developed in Norway from 2013 to 2015
  - Innovation project supported by the Research Council of Norway (MAROFF)
- Design concept demonstrated at SINTEF Energy
- Full-scale system rated for 1 MW power transfer demonstrated by Wärtsilä in laboratory environment

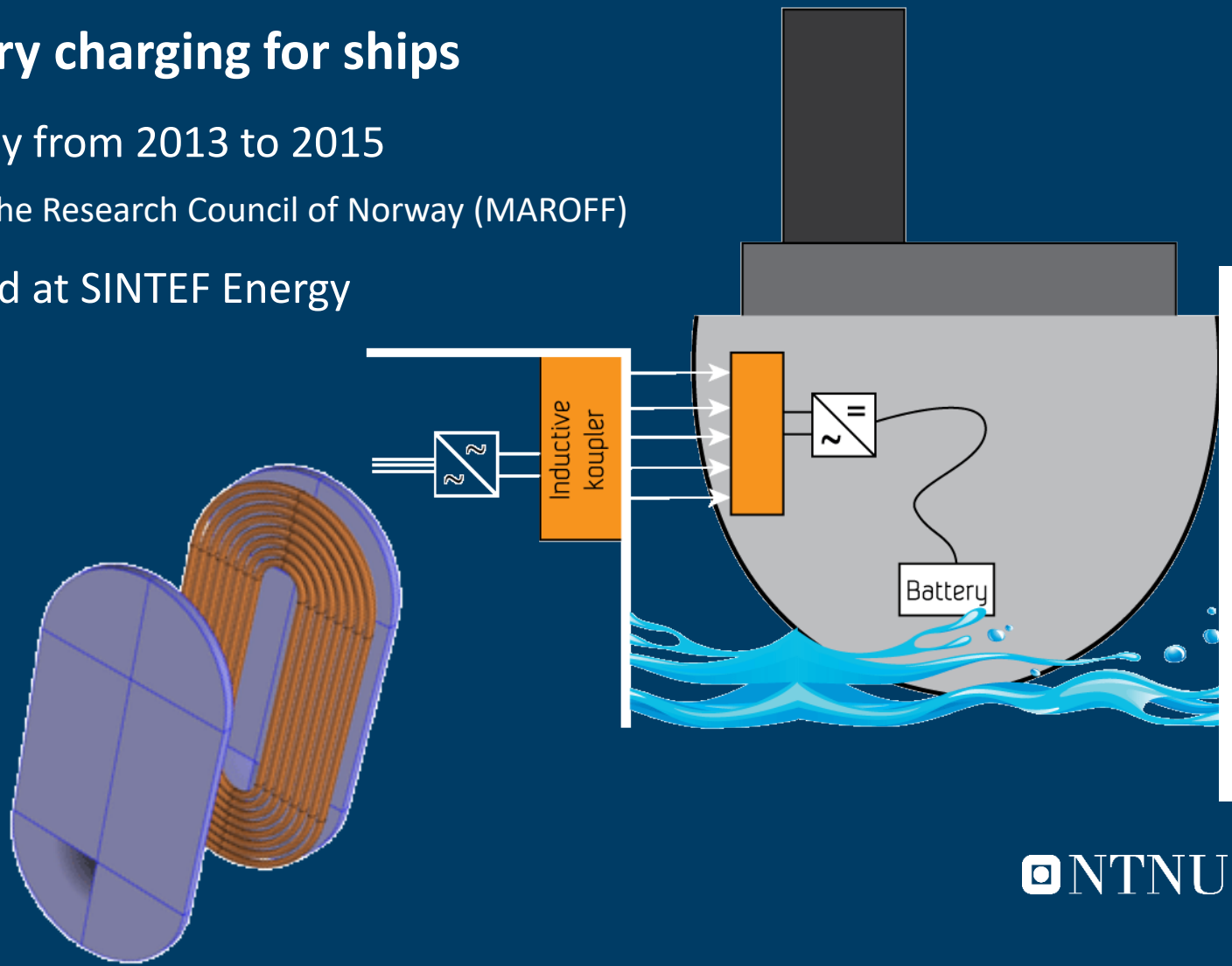

WÄRTSILÄ
FJELLSTRAND
SKL
Energi til utvikling
NORLED

NTNU SINTEF

Demonstration

- The first system was installed on the ferry MS Folgefonn for operation in August 2017
- Regular operation of the pilot installation as a demonstration case until October 2018
- Operated with 1.2 MW power transfer

- Fully autonomous docking
  - Demonstration from spring 2018
- First electric ferry with combined autonomous docking and charging

NTNU SINTEF

Limitations of previous high power concept

- High weight and large required area
  - Not a problem for large vessels
  - Prevents application to light vessels
- Practical design adapted to commercially available components

➢ New high power applications require research beyond the timeframe of commercial applications

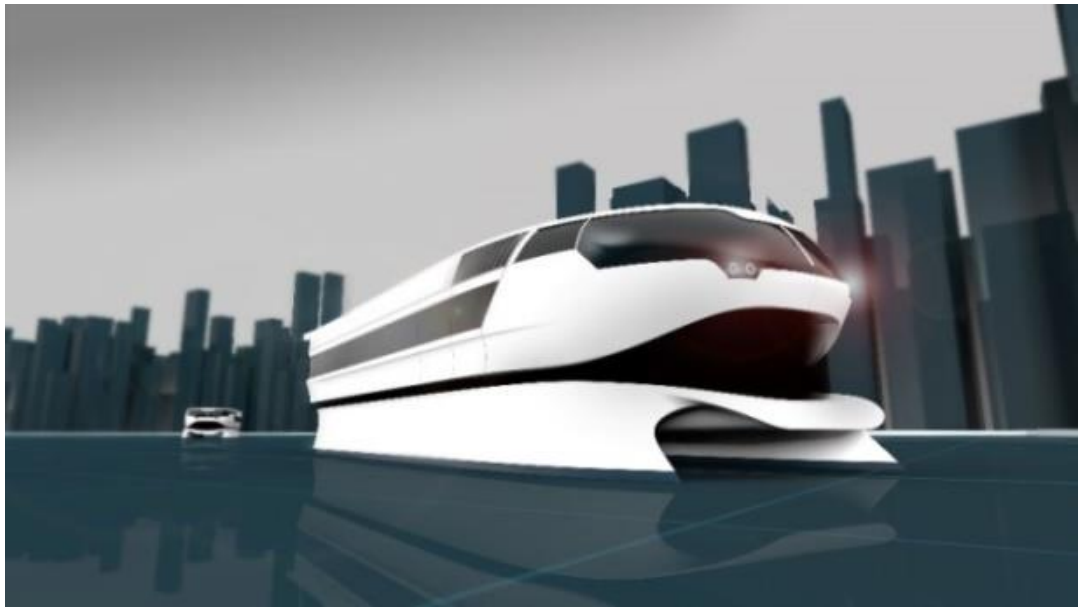

Example: Urban Water Shuttle – concept by NCE MaritimeCleanTech

NTNU SINTEF

Requirements for light vessel applications

- High power levels
  - Similar power range as for large ferries: 1-5 MW
- Drastic reduction of weigh
  - From multiple tonn/MW to 300-500 kg/MW
- Minimized surface area and volume
  - Smaller vessels have less available hull area and significantly less available on-board space

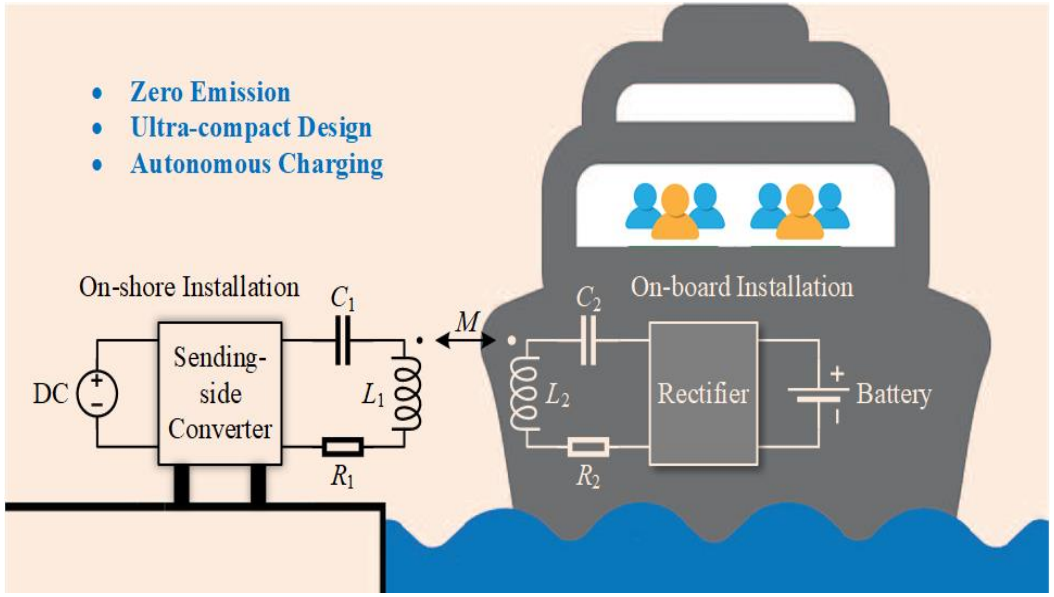

Project Outline

- Funded by the Research Council of Norway and Singapore Maritime Institute (SMI)
- Cooperation between NTNU, SINTEF Energi AS and Nanyang Technological University (NTU)
- General objective: Advance the scientific methods needed to enable new applications of technology for wireless inductive power transfer (IPT) in maritime applications:
- Design target: High power density IPT systems reaching 3 kW/kg for the coils and 2 kW/kg for the total on-board system
- Associated industry partners: Wärtsilä Norway AS and Xnergi

The Research Council of Norway

SINGAPORE MARITIME INSTITUTE

Ultra-high power density wireless charging for maritime applications

Jon Are Suul

Project manager

NTNU Department of Engineering Cybernetics / SINTEF Energi AS

NTNU Norwegian University of Science and Technology

SINTEF

NANYANG TECHNOLOGICAL UNIVERSITY SINGAPORE

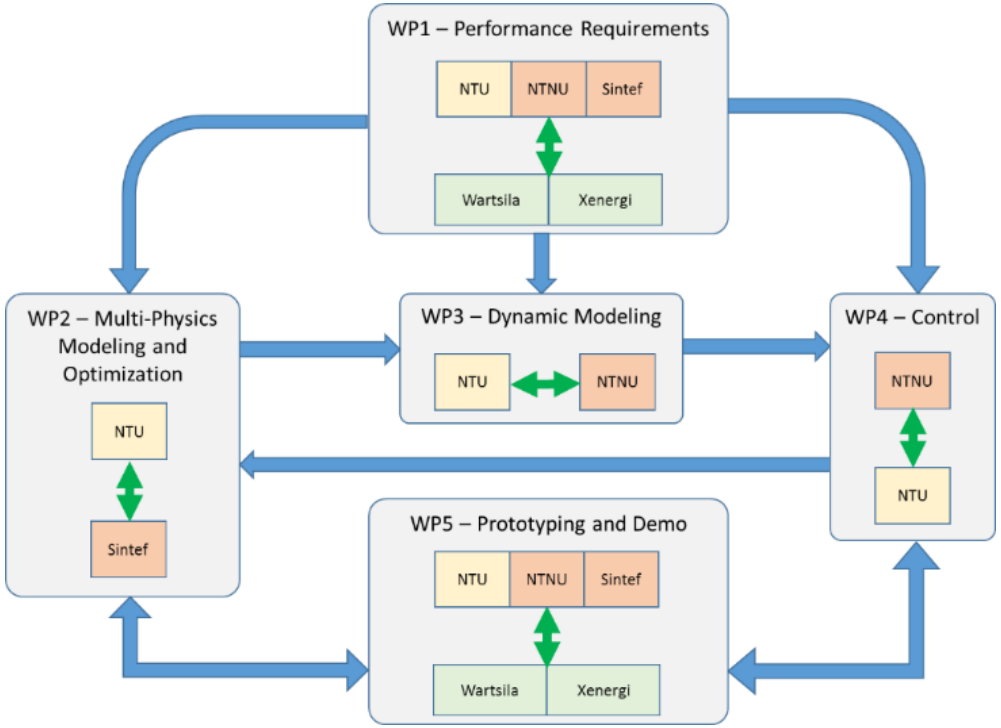

Project team

- NTNU, Department of Engineering Cybernetics
  - Jon Are Suul, Project manager and supervisor of PhD study on modelling and control
  - Marta Molinas, co-supervisor of PhD grant
  - Jiayu Zhou, PhD student
- SINTEF Energy Research
  - Giuseppe Guidi, key researcher on design optimization and demonstration
- Nanyang Technological University
  - Yi Tang, Principal Investigator / local project manager for activities in Singapore funded by SMI
  - Shuxin Chen, Research Associate working with power electronics hardware design
  - Xin Li, Research Fellow working with system modelling
  - Yiming Zhang, Research Fellow (Aug 19~Dec 20) working on coil design

Basic principles for high power design

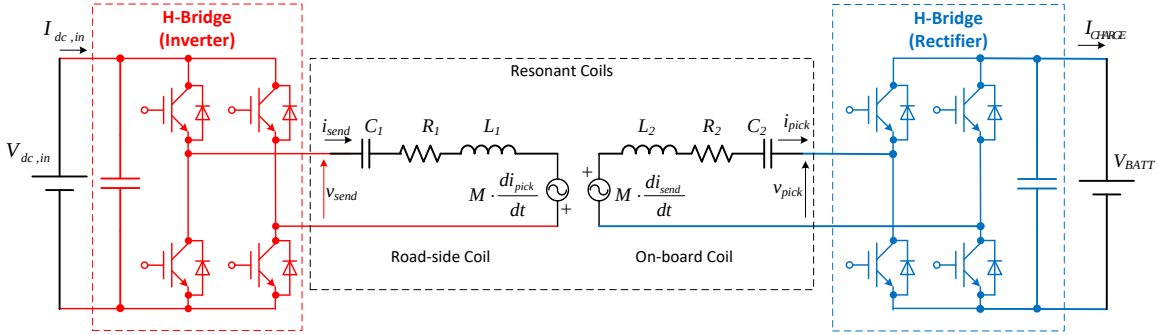

- Minimum number of components
  - Reduced complexity and cost
    - Cost of high power component does not scale linearly with rating
      - ➢ One is usually better (and cheaper) than two halves
  - Increased reliability
- Advanced control rather than additional hardware
  - High performance digital control is cheaper than high-power components.
- Prioritize cost/volume for pickups
  - Pickups add onboard weight and volume leading to increased energy requirements – Charger units do not
  - One charger usually serves many pickups – Interoperable designs are needed
  - Pickups are always paid by vehicle/ship owner – Chargers often are not

NTNU SINTEF

Selected research challenges

- Electromagnetic and thermal design
  - Loss calculation in high current Litz-wires
  - Thermal conductivity of high current Litz-wires
  - Cooling methods
- Multidomain optimization
  - Coil layout
  - Operating frequency and resonant circuit
  - Operating principle
- Converter design
  - Utilization of SiC components
- Control system design
  - Voltage/frequency control
  - PWM/PDM techniques

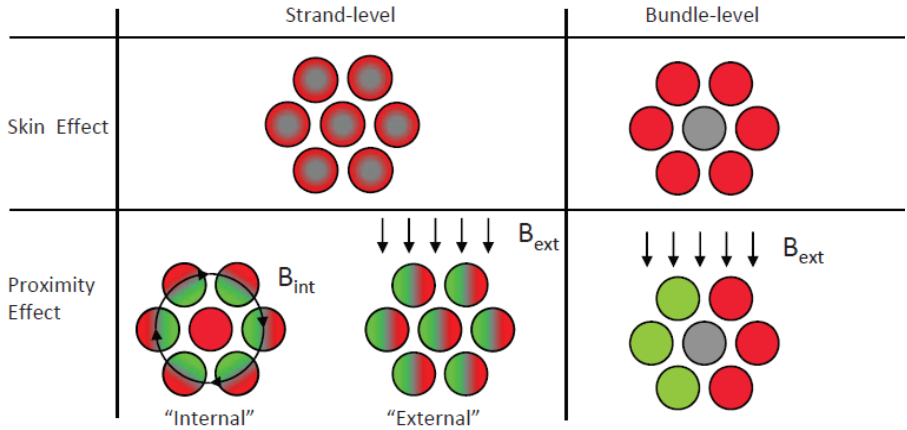

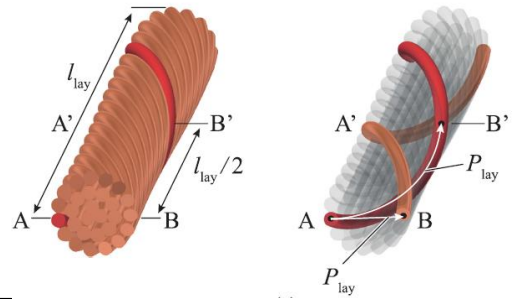

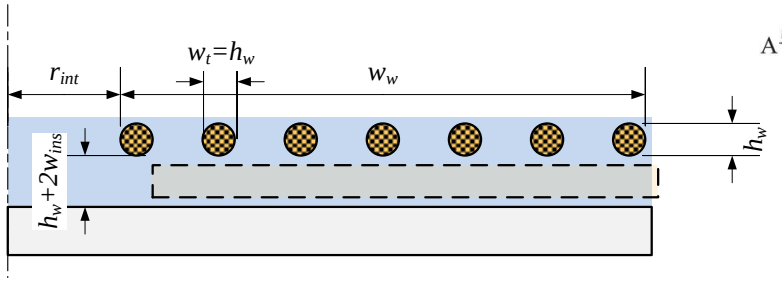

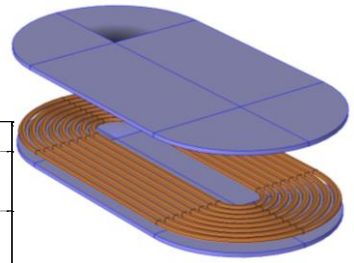

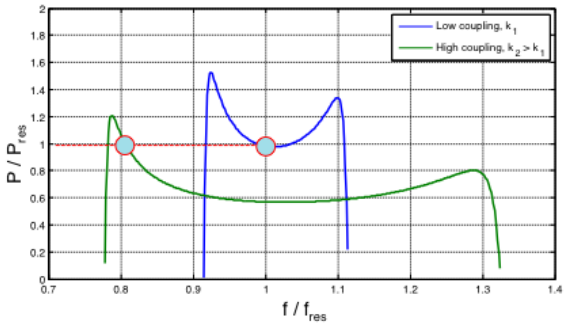

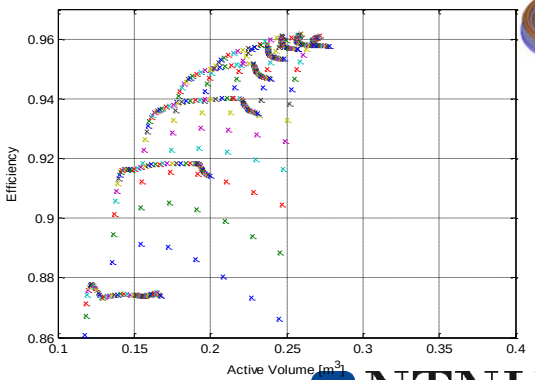

NTNU SINTEF

Outlook for wireless charging

- Already a proven technology up to MW-scale
  - Eliminates connection/disconnection time
  - No exposed contacts -> Safe and reliable operation
  - Fully automatable operation
  - High power transfer efficiency (> 95 %)
  - Adaptable for any on-board and on-shore power system configurations
- Next steps
  - Standardization
  - Market introduction and productification
  - Research needs
    - Improving power density for new applications (light/high-speed vessels)
    - Reducing cost
    - Upscaling towards power levels beyond 5 MW

NTNU SINTEF

Way forward

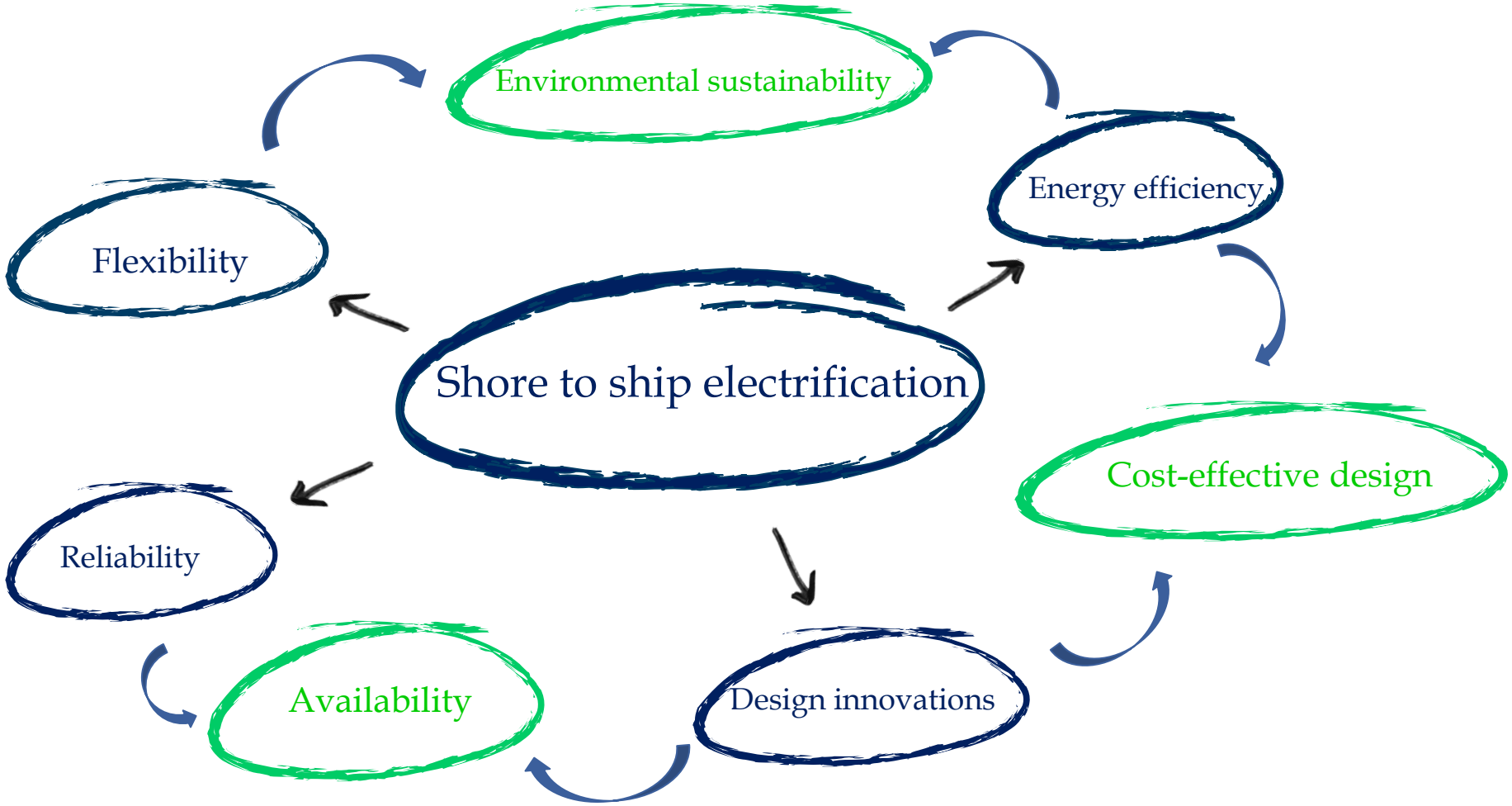
Environmental sustainability
Energy efficiency
Flexibility
Shore to ship electrification
Cost-effective design
Reliability
Availability
Design innovations

Senter for forskningsdrevet innovasjon
Norges forskningsråd

Thank you for your attention!

Questions?

SMART MARITIME